NOVONA
Gooseneck Sink Mixer

LF23603540CP-2 | Chrome
LF23603540MB-2 | PVD Matte Black
LF23603540BN-2 | PVD Brushed Nickel
LF23603540BB-2 | PVD Brushed Brass
LF23603540GM-2 | PVD Gunmetal

MP: WELS 5 STAR 6.0L/MIN
LP : WELS 4 STAR 7.0L/MIN
All Pressure

- Swivel Spout
- Dual Function Spray

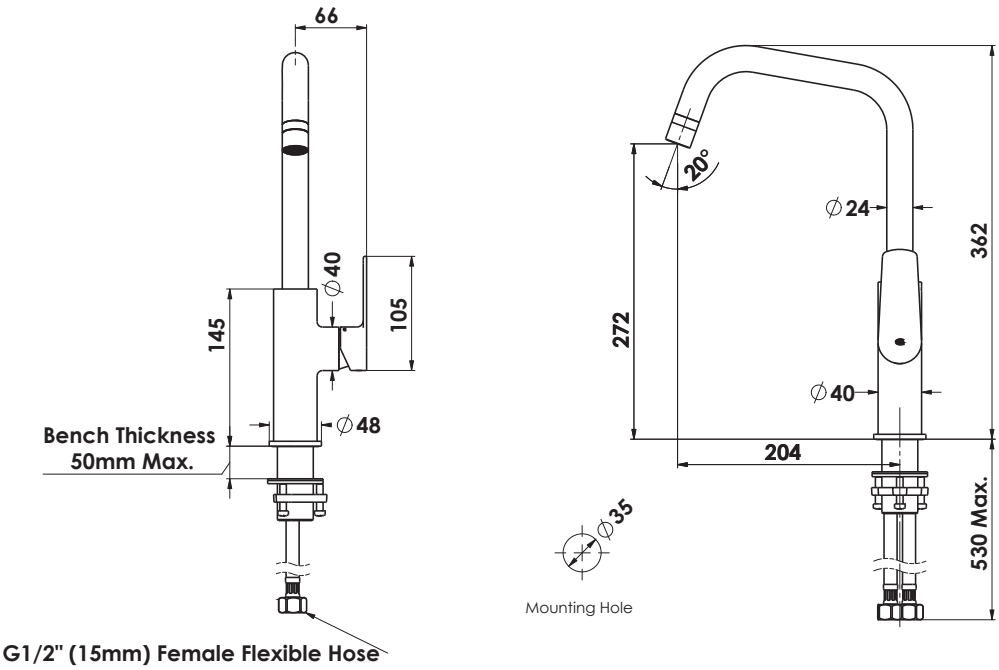

NZ PHONE 0800 655 455
EMAIL nzsales@greenstapware.com
WEBSITE www.greenstapware.com

GREENS
where life meets water