HELIX
Bath Spout

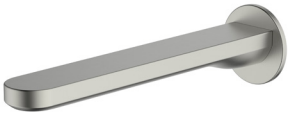

531600CP | Chrome
531600BN | PVD Brushed Nickel

WELS N/A
All Pressure

- 15mm inlet

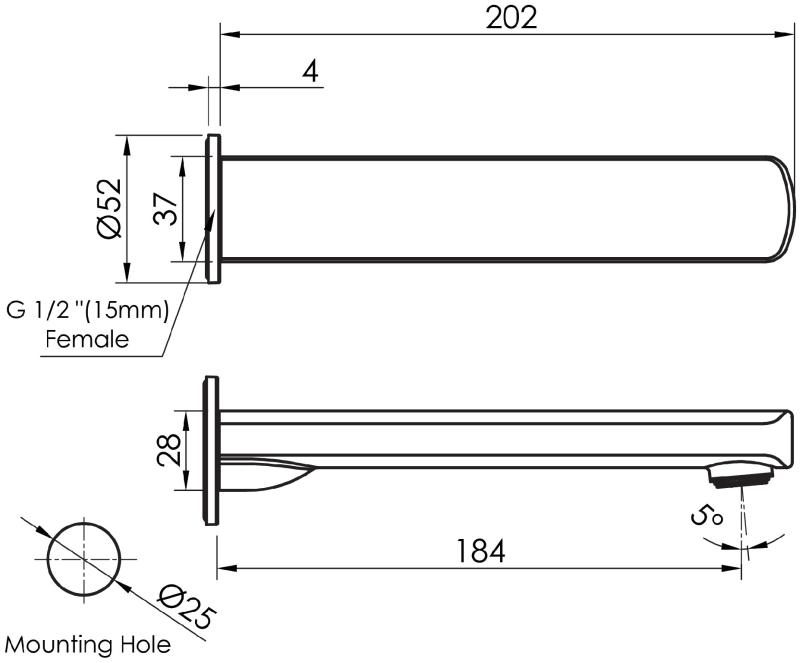

NZ PHONE 0800 655 455
EMAIL nzsales@greenstapware.com
WEBSITE www.greenstapware.com

GREENS
where life meets water