MAIA
Bath Spout

LF2430190CP | Chrome
LF2430190BB | PVD Brushed Brass
LF2430190MB | PVD Matte Black
LF2430190GM | PVD Gunmetal
LF2430190BN | PVD Brushed Nickel

WELS N/A

- Fixed Spout
- 190mm

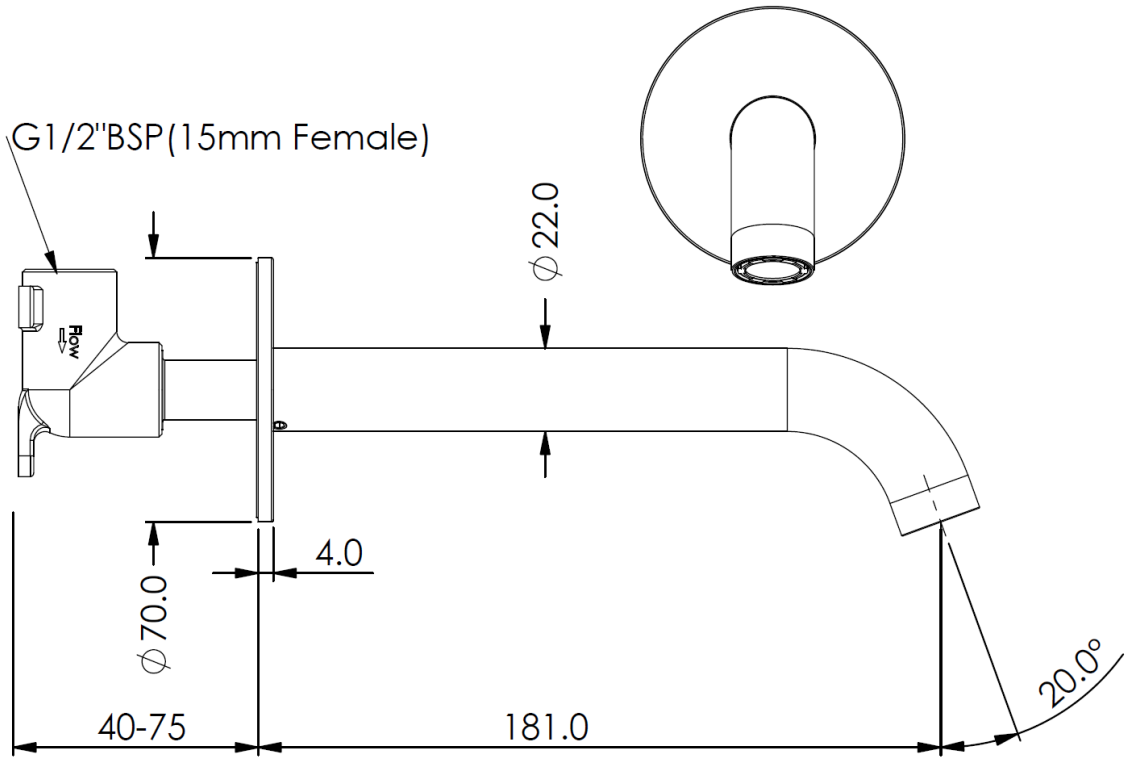

NZ PHONE - 0800 655 455
EMAIL - nzsales@greenstapware.com
WEBSITE - www.greenstapware.com

GREENS
where life meets water